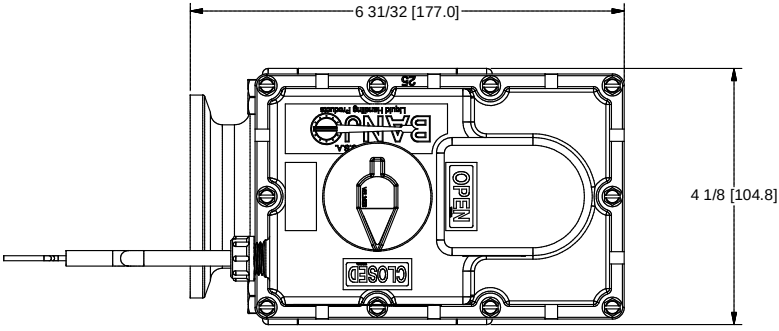
6 31/32 [177.0]
4 1/8 [104.8]
CLOSED
OPEN
BANJO
25

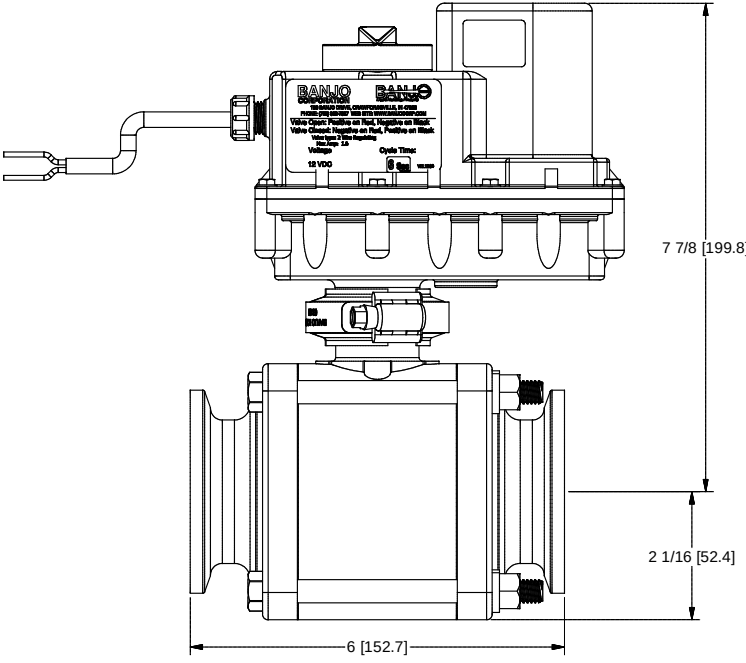
BANJO
BANJO
Valve Open: Positive on Red, Negative on Black
Valve Closed: Negative on Red, Positive on Black
Voltage
Cycle Time:
12 VDC
7 7/8 [199.8]
2 1/16 [52.4]
6 [152.7]